TD164 Continuous rotation

RoHS compliant

Product lineup

Product image

TD164R(CM)-AT

Features

- Continuous Rotation in a Partial Rotation Angle Damper Design
- Consistent torque performance without high- or low-torque ranges
- High rigidity achieved by the use of zinc alloy
- Superior damping responsiveness
- Durable for 200,000 cycles
- One direction rotary damper

Product name	Torque [N•m] (lbf•in)	Damping direction
TD164R1-5K(CM)-AT	0.5 (4.43)	CW

Product specifications

Durability

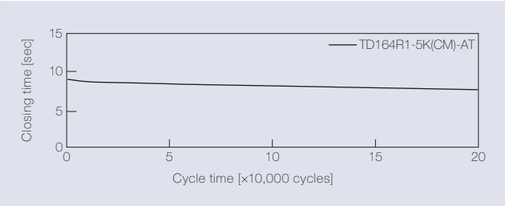

Torque	0.5 N•m (4.43 lbf•in)
Radial load	N/A
Angle range of closing time	70 to 0 deg.
Temperature	23 ± 2°C (73.4 ± 3.6°F)
Durability	200,000 cycles

Temperature characteristics

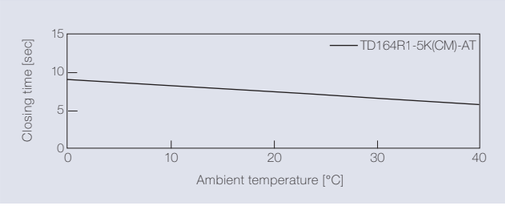

Measured according to the performance management testing method shown below after leaving in each designated ambient temperature for over one hour.

Performance management testing method

As the torque of partial rotation angle dampers is not consistent, the closing time measurement jig is used for the performance tests

[Operation during measurement]
(Secures the housing of a rotary damper and moves its shaft)
All rotary dampers are managed by the following closing time test.

Test mode [110° → 70° (Pause) → (Free fall with damping) → 0°]
* Horizontal plane: 0°

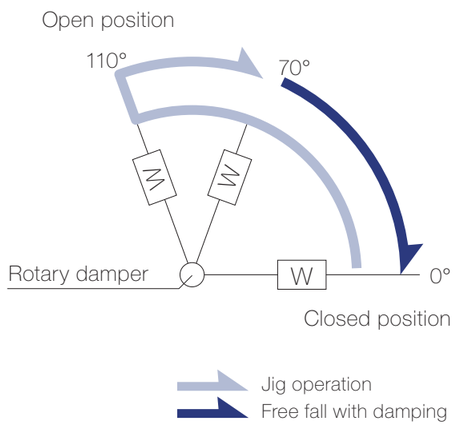

Inspection specification before shipping

Type	Preset torque [N•m] (lbf•in)	Closing time
5K	0.5 (4.43)	3 to 12 sec

Product information

[mm]

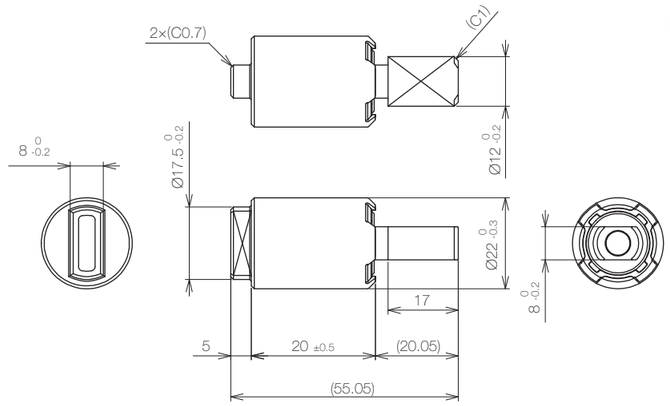

- Opening angle: 360°
- Product weight: Approx. 46 g

Main materials

Housing	Zinc alloy (ZDC)
Cap	Plastic (POM)
Attachment Shaft	Zinc alloy (ZDC)

* General tolerance: ±0.3
* Shaft position at the time of shipping: Drawing position

Dimensions related to mounting

[mm]

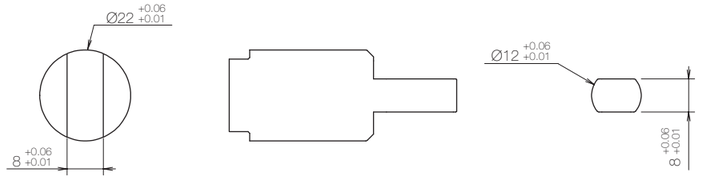

Damping directions

Rotation directions of the shaft to which torque is applied

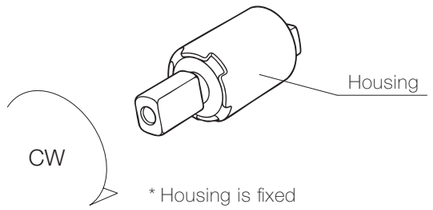

* Housing is fixed

TOK, Inc. • 1-17-12, Azusawa, Itabashi, Tokyo, 174-8501, Japan • +81-3-3969-1584 • support@tok-inc.com • tok-inc.com/en